SHT 1 OF 1

D-022442

FILMS LOCATION D-143476			
DATE	SYM	WAS	BY
7/3/79	A	"O" RING#Z-218	JH/CANAM
7/3/79	B	A-024478	JH/CANAM
11/21/79	C	ADDED DATA	RC/ARC
03/20/97	D	DIM. WAS 229.59	JP/NCN
03/29/97	E	ADDED NOTE	JP/NCN

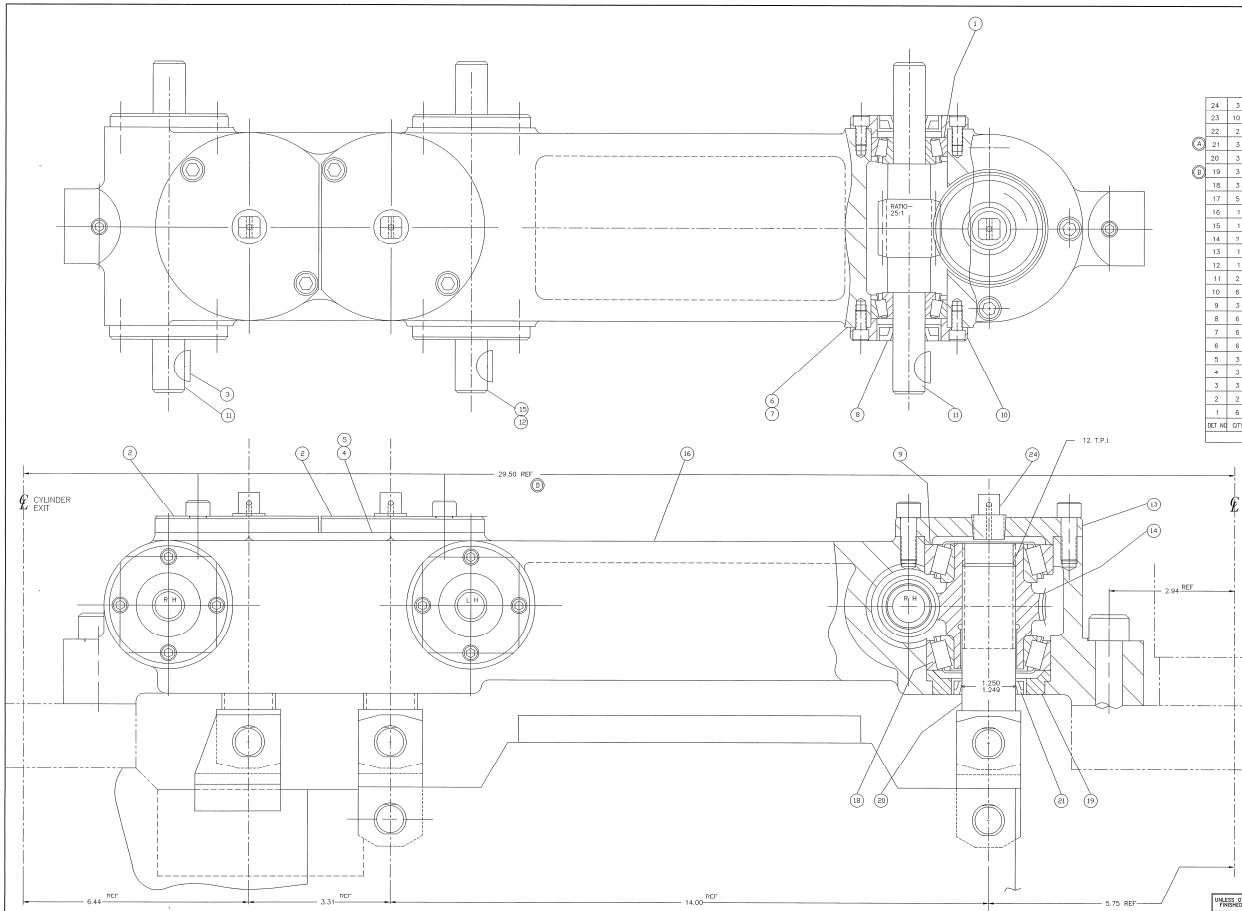

DET NO	QTY	PART NO	DESCRIPTION	DRAW'G NO
24	3	138032	PLUG – BREATHER	B-022328
23	10	090923	RING – RET "WALDES" TRU-ARC #5100-62	
22	2	049512	LINK – ADJ – BRIDGE	A-049512
(A) 21	3	090714	SEAL – OIL "C.R." #12358	
20	3	024476	SCREW – ADJ	B-024476
(B) 19	3	143475	RETAINER – SEAL – ADJ. BRIDGE	A-143475
18	3	091257	BRG – ROLLER "TIMKEN" #LM-501349 & LM-501310	
17	5	024485	PIN – LINK	A-024485
16	1	024472	BRIDGE – ADJUSTMENT	D-024472
15	1	024482	GEAR – L.H. – WORM	B-024481
14	2	024481	GEAR – R.H. – WORM	B-024481
13	1	024473	COVER – BEARING	B-024473
12	1	024475	WORM & SHAFT – L.H.	B-024474
11	2	024474	WORM & SHAFT – R.H.	B-024474
10	6	024480	COVER – SEAL RETAINER	B-024480
9	3	091256	BRG – ROLLER "TIMKEN" #24780 & 24720	
8	6	091292	SEAL – OIL "TROSTEL" R-132-45-6	
7	6	091262	SHIM – "TIMKEN" #K-20707	
6	6	091261	SHIM – "TIMKEN" #20705	
5	3	091260	SHIM – "TIMKEN# #K-21207	
4	3	091259	SHIM – "TIMKEN" #K-21200	
3	3	000000	KEY –WOODRUFF #91	
2	2	024477	COVER – BRG – (FLAT)	B-024477
1	6	091258	BRG – ROLLER "TIMKEN" #LM-11910 & LM-11949	

PARTS LIST

NOTE: QUANTITIES SHOWN ARE FOR 1 UNIT

ENG DATA:
1 TURN OF WORM – .0033" VERT TRAVEL
300 TURNS – 1.000" VERT TRAVEL
CLOCKWISE – DOWN
COUNTER-CLOCKWISE – UP

NOTES:
1. FOR METRIC TAPS & THREADS SEE DWG. #D-288393
2. LAYOUT ADJ. BRIDGE WITH DIAL INDICATOR AT FRONT SIDE SEE LAYOUT DWG. #D-292671

UNLESS OTHERWISE SPECIFIED FINISHED SURFACES HAVE:
125 MICRO INCH FINISH

DIMENSIONS	TOLERANCE ±
X AND X.X	0.1"
X.XX	0.01"
X.XXX	0.001"
X.XXXX	0.0001"
ANGLES ± 0 30'	

BREAK SHARP CORNERS 0.03
UNLESS OTHERWISE SPECIFIED

COPYRIGHT VERSON INTERNATIONAL GROUP INC. ALL RIGHTS RESERVED. THIS DOCUMENT CONTAINS PROPRIETARY INFORMATION. NO PART OF THIS DOCUMENT OR REPRODUCTION OF VERSON INTERNATIONAL GROUP INC. NO DISCLOSURE OR USE OF ANY PORTIONS OF THESE MATERIALS MAY BE MADE WITHOUT THE EXPRESS WRITTEN CONSENT OF VERSON INTERNATIONAL GROUP INC.

	DATE	NAME
CHKD.	6/10/92	TJG
DRN.	6/9/92	DRR
DES.		

LITTELL
VERSON INTERNATIONAL GROUP INC.

TITLE LAYOUT – ADJUSTMENT BRIDGE

MACHINE #442 STRAIGHTENER MACHINE

PART NO. D-143476

ORIG. NO. 64251-78 | SHT 1 OF 1 | SCALE: FULL