REDRAWN FROM "E" SIZE DWG OF 4-22-80 BY TJG

SHEET 2 OF 2 SHEETS

FILING LOCATION D-146295

REVISIONS				
DATE	SYM.	WAS		BY
12-2-88	A	A-121715		TJG
3-23-88	B	REMOVED ALL THE SHIMS FROM THE SKID CLAMP & ADDED A SHIM TO ASSY.		TJG
5-23-88	C	B-122586 (B-122586-2)		Dor Chin TJG

DEC 1992

ITEM	PART NO.	DESCRIPTION	NO. REQ
55	K-090008	RING-RET."WALDES" TRU-ARC #5100-100	4
54	X-121726	PIN-CLEVIS (B-052240)	1
53	X-048658	PIN-CLEVIS (B-052240)	1
52	K-093652	BUSHING-SELF ALIGNING "RBC" #B-16-L (1.00×1.625×1.875)	2
51	B-121721	CLEVIS-TABLE CYLINDER	1
50	K-093795	CYLINDER-HYDRAULIC "ORTMAN-MILLER" SERIES 101 MODEL FH 3.50 BORE × 14.50 STROKE - CUSHIONED BOTH ENDS	1
49	B-121722	CLEVIS-TABLE SHIFT CYLINDER	1
48	B-121720	PIVOT-TABLE CYLINDER	2
47	A-121719	SPACER-TILT TABLE CYLINDER	1
46	B-121709	RETAINER-WHEEL	2
45	B-121708	RAIL-WEAR	2
44	A-121703	STOP-TILT TABLE	2
43	D-121701	TABLE-TILT	1
42	B-121723	COVER-TILT CYLINDER	1
41	B-122319	SHAFT-ROTARY LIMIT SWITCH	1
40	K-091246	COUPLING "B.G.W" FC-BB-20	1
39	K-093421	SWITCH "GEMCO" #4-N/1" GEMCO & UNIT CAM SWITCH # 1980-104 R-SP-X	1
38	A-123514	SPACER-ROTARY LIMIT SWITCH	1
37	B-123515	BRACKET-ROTARY LIMIT SWITCH	1
36	A-125512	BRACKET-LIMIT SWITCH	1
35	K-090567	SWITCH-LIMIT "SQUARE D" CLASS 9007 TYPE AW-12-CA1	1
34	B-122337	MANIFOLD	1
33	B-122347	MANIFOLD	2
32	X-256504	BLOCK-BUMPER-TABLE (B-256503)	1
31			
30	K-225719	NUT-HEX. 1.75-12 RH THRD	4
29	X-122349	WASHER-STEEL 1.75 × 3.25 × .25 THK (B-030700)	4
28	K-093924	WHEEL-FLANGED "TIMKEN" COMPLETE ASS'Y AS SHOWN ON TIMKEN DWG A-34081	4
27	B-121707	AXLE-TILT SADDLE	4
26	B-121716	CAP-CLAMP CYLINDER	2
25	K-093796	CYLINDER-HYDRAULIC "ORTMAN-MILLER" SERIES 101-MODEL GH 2.00 BORE × 6.00 STROKE - CUSHION BOTH ENDS	2
24	B-121717	CLAMP-SKID	2
23	K-208607	RING-RET "WALDES" TRU-ARC #5100-400	4
22	B-121718	HOUSING-SKID CLAMP	2
21	X-121710	PAD-SADDLE (A-060165)	2
20	B-121705	COVER-BEARING	1
19	B-121706	COLLAR-RETAINER	1
18	B-117095	COVER-BEARING	1
17	K-093651	BEARING "McGILL" SINGLE ROW SPHERICAL ROLLER #SB-22319-SS (3.7402 I.D. × 7.8740 O.D. × 2.6378 W.)	2
16	B-121704	SHAFT-TILT SADDLE	1
15	D-121702	SADDLE-TILT	1
14	D-121547	MANIFOLD-HIGH PRESSURE	1
13	D-121546	MANIFOLD-LOW PRESSURE	1
12	D-121553	TANK-HYDRAULIC	1
11	K-000000	MOTOR PUMP-ASS'Y "VICKER"	1
10	X-054157	LOCK-CLEVIS PIN (B-042748)	2
9	K-092978	BUSHING-SELF ALIGNING "RBC" #B-44-L	2
8	X-146294	PIN-CLEVIS (A-060182)	2
7	B-146292	CLEVIS-TILT CYLINDER	1
6	X-146293	SPACER-TILT CYLINDER (B-131744)	1
5	B-142248	CYLINDER-TILT SADDLE 8.00" BORE	1
4			
3			
2	B-256503	BLOCK-SHIM (GRIND & WELD IN ASS'Y)	4
1	D-121700	BASE	1

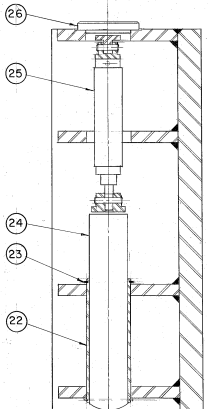

SECTION F-F
.25 = 1.0
SKID CLAMP

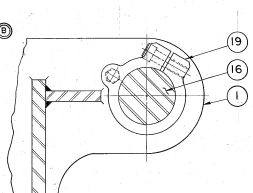

SECTION G-G
.25 = 1.0
TILT SADDLE SHAFT

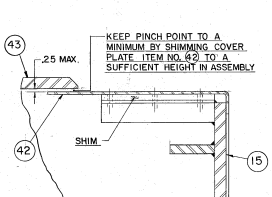

SECTION H-H
.25 = 1.0

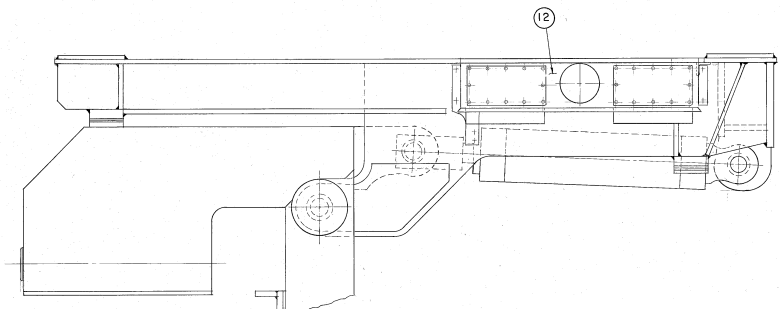

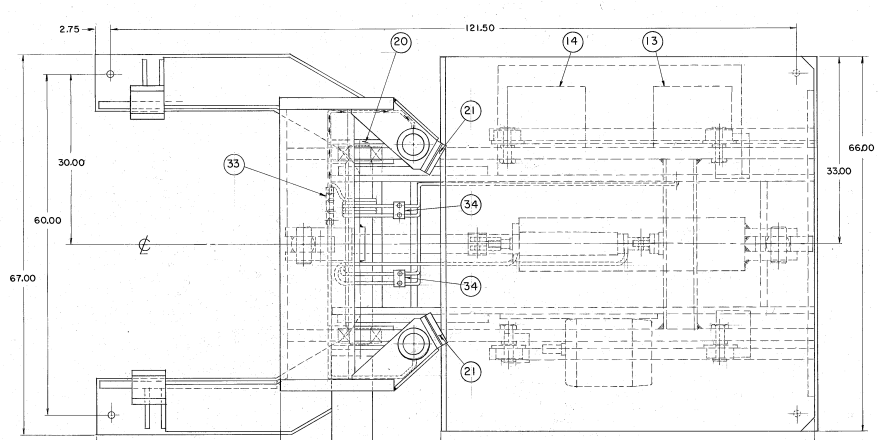

UNLESS OTHERWISE SPECIFIED FINISHED SURFACES HAVE	
125 MICROINCH FINISH	
DIMENSIONS	TOLERANCE ±
X AND X.X	0.1"
X.XX	0.01"
X.XXX	0.001"
X.XXXX	0.0005"
ANGLES ± 0° – 30'	
BREAK SHARP CORNERS 0.05 UNLESS OTHERWISE SPECIFIED	

MITCHELL MACH. CO. CHICAGO

DRAWN: TJG 5-23
CHECKED: TJG
SCALE: 1 = 10
DATE: 12-2-80
MATERIAL: SEE PARTS LIST
FINISH: SEE PARTS LIST
DATE: 12-2-80
DATE: 12-2-80

ASSEMBLY-COIL TILTER (TOP/REAR VIEWS)
COIL TILTER SERIES III

ORIGINAL ORDER NUMBER: 86252-80

SIZE: D
DWG. NO.: 146295
SHEET 2
REV. NO.: 2