SHEET OF SHEETS

MICROFILMED: OCT 1987

FILING LOCATION: D-216708

REVISIONS			
DATE	SYM.	MAP	BY
1-15-85		117366	Tyc

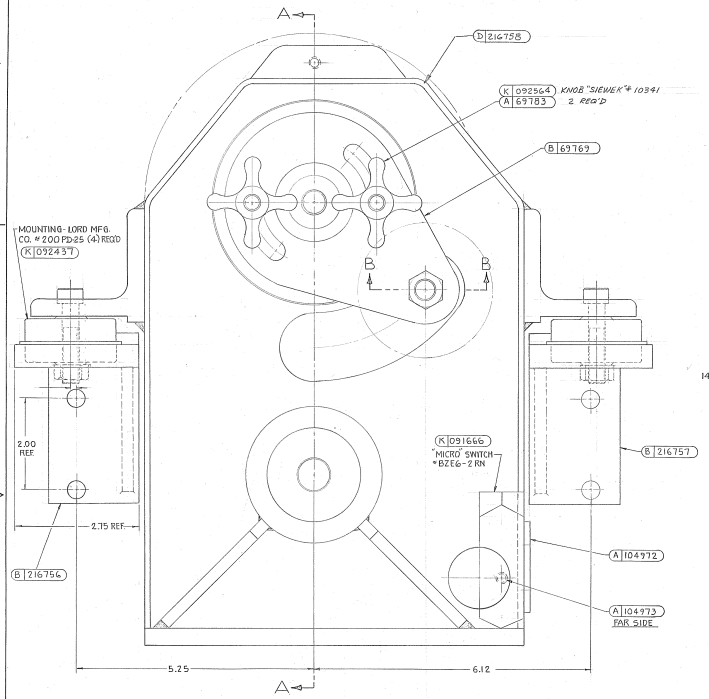

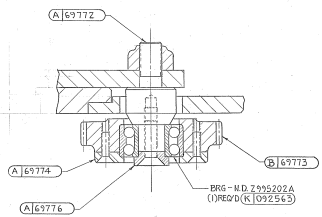

SECTION B-B

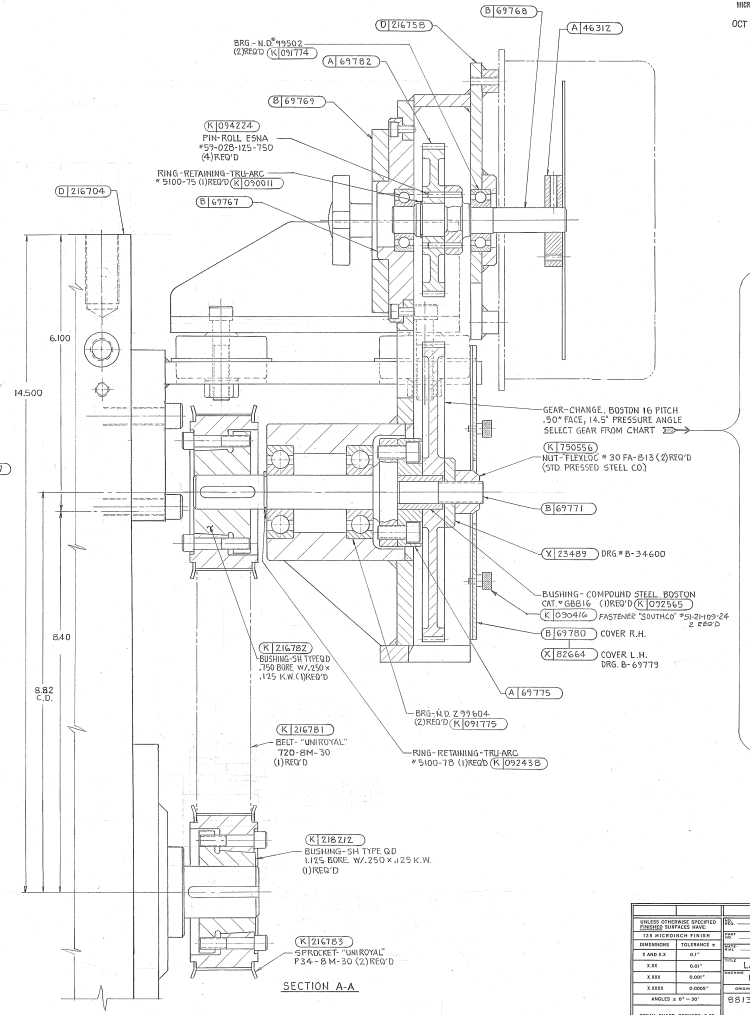

SECTION A-A

CHART FOR SELECTING CHANGE GEAR TO SUIT FEED LENGTH—

ONE REVOLUTION OF PULSE GENERATOR PRODUCES 22 PULSES. NUMBER OF TEETH IN CHANGE GEAR × .42308 = PULSE / REV. OF INPUT SHAFT.

PART NO.	FEED LGTH	BOSTON CAT. NO.
93675	18"-19"	GB45
93676	19"-20"	GB48
93677	20"-21"	GB50
93678	21"-22"	GB52
93679	22"-23"	GB55
93680	23"-24"	GB57
92566	24"-25"	GB60
92567	25"-26"	GB62
92568	26"-27"	GB64
92569	27"-28"	GB67
92570	28"-29"	GB69
92571	29"-30"	GB71
92572	30"-31"	GB74
92573	31"-32"	GB76
92574	32"-33"	GB78
92575	33"-34"	GB81
92576	34"-35"	GB83
92577	35"-36"	GB86
92578	36"-37"	GB88
92579	37"-38"	GB90
92580	38"-39"	GB93
92581	39"-40"	GB95
92582	40"-41"	GB97
92583	41"-42"	GB100
92584	42"-43"	GB102
93669	43"-44"	GB104

UNLESS OTHERWISE SPECIFIED FINISHED SURFACES HAVE 125 MICROINCH FINISH

DIMENSIONS	TOLERANCE ±
X AND X.X	0.1"
X.XX	0.01"
X.XXX	0.005"
X.XXXX	0.0005"
ANGLES ± 0° - 30'	

BREAK SHARP CORNERS 0.03 UNLESS OTHERWISE SPECIFIED

R.J. WATERMAN CO. MICROFILM

DATE: 1-15-85

PART NO.: 1

DESIGN: FULL

DATE: 1-15-85

TITLE: LAYOUT-PULSE GENERATOR

SCALE: BR-5 SHEAR

ORIGINAL ORDER NUMBER: 88133-84

DWG NO.: D 216708

SHEET NO.: 1 OF SHEETS: 1