MICROFILMED

MICROFILMED

FILES LOCATION	D- 229681

REVISED			
DATE	SYM.	NAME	BY
- - -			
9-10-86	A.	ADD ITEM 19 CHANGE ITEM 28	
- - -		D-262862	
- - -		D-262862	

ITEM NO.	PART NO.	DESCRIPTION		QTY.
1	X-227387	BRACKET-FRONT STOCK GUIDE	B-216733	1
2	X-227386	WAYS-FRONT STOCK GUIDE	B-150117	1
3	A-131285	LATCH-FRONT GUIDE BRACKET		1
4	A-116093	NUT-ADJUSTING		1
5	X-228904	SCREW-ADJUSTING	B-116094	1
6	A-117310	HOUSING-BEARING		1
7	K-092443	BEARING-BALL-"N.D." #Z993L04		1
8	K-093111	NUT-BEARING-"MFGR'S STD." #N-04		1
9	K-093121	WASHER-LOCK-"MFGR'S STD." #W-04		1
10	X-117318	PIN-GUIDE ROLLS	A-089605	4
11	K-093354	WHEEL-"INTEROLL"-#230-11 1.50 DIA.		22
12	X-152473	SHIM-SPRING RETAINER	B-129957	2
13	B-110284	BRACKET-GUIDE ROLL		2
14	B-110285	ROLLER-GUIDE BRACKET RETAINER		4
15	K-093135	BEARING-BALL-"N.D." #Z99036		8
16	K-094238	HANDWHEEL-"BAL.CRANK" 5" DIA. #1545001		1
17	K-092893	BUSHING-"OILITE"-#FF-1202-3		2
18	X-229712	SPACER-STOCK GUIDE HANDWHEEL	B-160476	1
19				
20	A-149261	SPACER-SLIDE CLAMP		1
21	X-144129	SPACER-SUPPORT PLATE	B-144130	2
22	A-152472	PLUNGER-LOCATOR SLIDE		2
23	K-094321	SPRING-"DANLY"-#S-1606-21		2
24	B-117314	BRACKET-LATCH-STOCK GUIDE		1
25	K-090046	SPRING-"GARDNER"-#E-42C		1
26	C-218594	BRACKET-HINGED-FRONT GUIDE		1
27	X-117321	SHAFT-PIVOT	B-013339	1
28	K-091444	BUSHING-"OILITE"-#FF-620-1		2
29	A-116096	RETAINER-BEARING		1
30	C-221955	SLIDE-FRONT STOCK GUIDE		1
31	B-227373	PLATE-ROLLER SUPPORT FRONT R.H.		1
32	B-223388	PLATE-ROLLER SUPPORT FRONT L.H.		1
33	A-135162	PISTON-AIR CYLINDER		2
34	A-135163	BODY-AIR CYLINDER		2
35	A-138677	POINTER-SCALE-FRONT		1
36	X-228905	SCALE-FRONT STOCK GUIDE	B-120287	1
37	B-228911	SUPPORT-HINGED GUARD		1
38	C-228907	GUARD-INGOING FRONT (HINGED)		1

SEP 1987

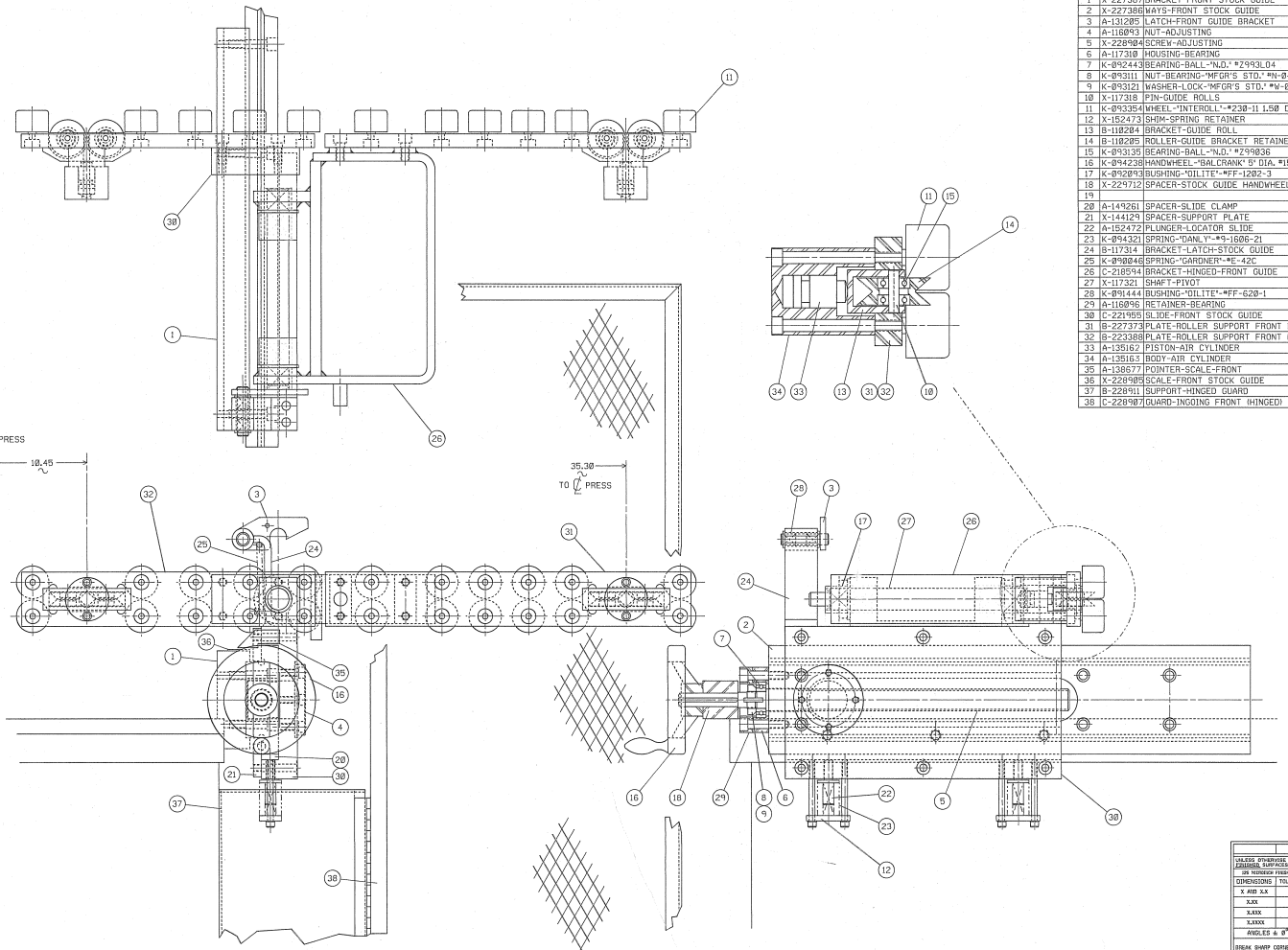

UNLESS OTHERWISE SPECIFIED REMOVE SURFACES HAVING 125 MICROINCH FINISH	
DIMENSIONS	TOLERANCE ±
X AND X.X	0.2"
X.XX	0.01"
X.XXX	0.005"
X.XXXX	0.0005"
ANGLES ± 0°-30'	
BREAK SHARP CORNERS 0.03 UNLESS OTHERWISE SPECIFIED	

LITTELL MACHINE CO.

DR. ~	DATE 09-11-85
CHKD. BY ~	CHKD. BY 250"+1.0"
MAT'L SEE DRAWING	W. BY SC
TITLE LAYOUT-FRONT STOCK GUIDES	
MACHINE BR-4 PRESS	
ORIGINAL ORDER NUMBER	DWG. 229681
88300-85	SHEET NO. 1 OF SHEETS 1