SHT 1 OF 1

FILING LOCATION D- 288393			
DATE	SYM	WAS	BY

D-143476

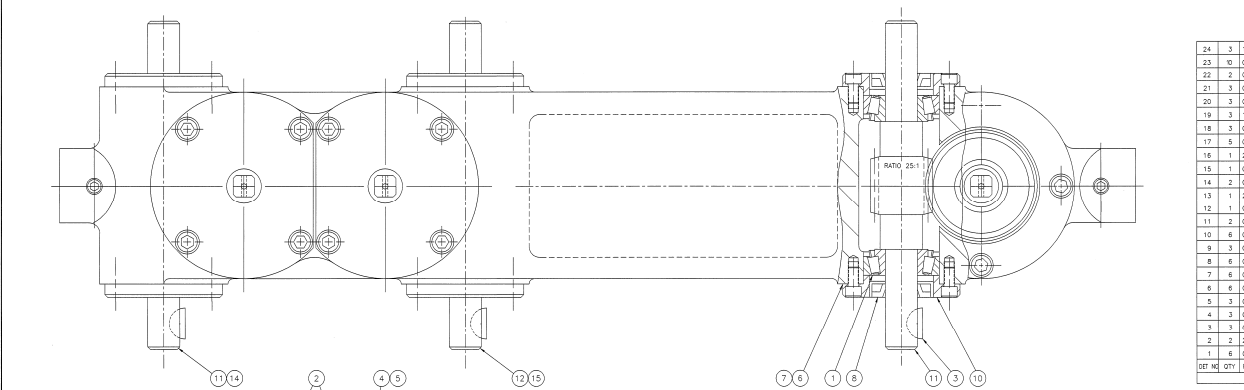

DET NO	QTY	PART NO	DESCRIPTION	DRAWG NO
24	3	138032	PLUG - BREATHER	B-022328
23	10	090923	RING - RET "WALDES" TRU-ARC #5100-62	
22	2	049512	LINK - ADJ - BRIDGE	A-049512
21	3	090714	SEAL - OIL "C.R." #12358	
20	3	024476	SCREW - ADJ	B-024476
19	3	143475	RETAINER - SEAL - ADJ BRIDGE	A-143475
18	3	091257	BRG "TIMKEN" #LM-501349 & LM-501310	
17	5	024485	PIN - LINK	A-024485
16	1	288976	BRIDGE - ADJUSTMENT	D-288976
15	1	024482	GEAR - L.H. - WORM	B-024481
14	2	024481	GEAR - R.H. - WORM	B-024481
13	1	288977	COVER - BEARING	B-288977
12	1	024475	WORM & SHAFT - L.H.	B-024474
11	2	024474	WORM & SHAFT - R.H.	B-024474
10	6	024480	COVER - SEAL RETAINER	B-024480
9	3	091256	BRG - ROLLER "TIMKEN" #24780 & 24720	
8	6	091292	SEAL - OIL "TROSTEL" R-132-43-6	
7	6	091262	SHIM - "TIMKEN" #K-20707	
6	6	091261	SHIM - "TIMKEN" #20705	
5	3	091260	SHIM - "TIMKEN# #K-21207	
4	3	091259	SHIM - "TIMKEN" #K-21205	
3	3	000000	KEY -WOODRUFF #91	
2	2	288978	COVER - BRG - (FLAT)	B-288978
1	6	091258	BRG "TIMKEN" #LM-11910 & LM-11949	

PARTS LIST

NOTE: QUANTITIES SHOWN ARE FOR 1 UNIT

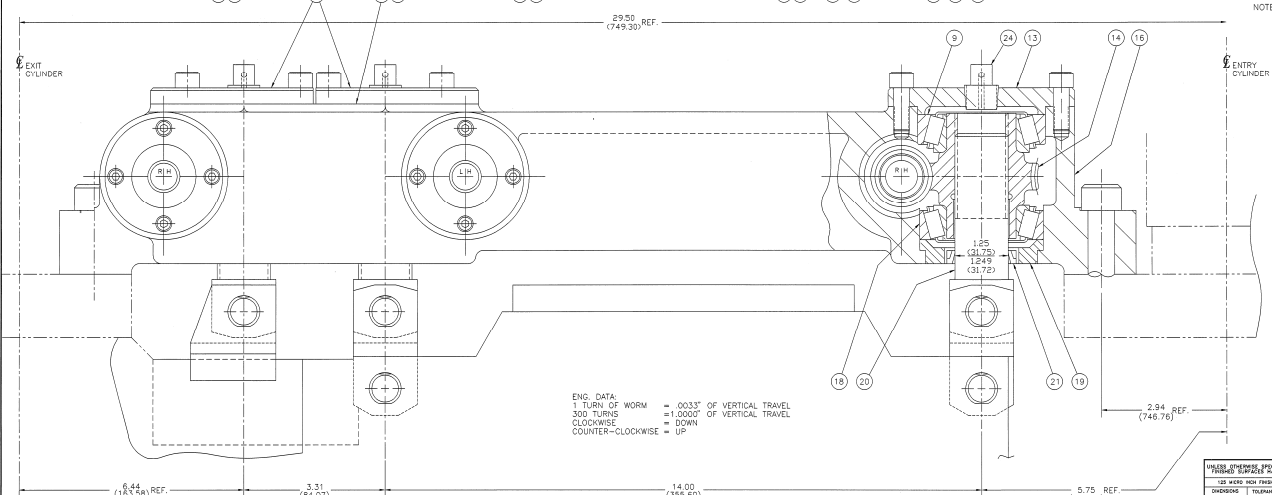

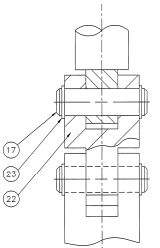

ENG. DATA:
1 TURN OF WORM = .0033" OF VERTICAL TRAVEL
300 TURNS =1.0000" OF VERTICAL TRAVEL
CLOCKWISE = DOWN
COUNTER-CLOCKWISE = UP

INCH SEE D-143476

DIMENSIONS IN/(MM) OR IN (MM)

UNLESS OTHERWISE SPECIFIED FINISHED SURFACES HAVE:	
125 MICRO INCH FINISH	
DIMENSIONS	TOLERANCE ±
X AND X.X	0.1"
X.XX	0.01"
X.XXX	0.001"
X.XXXX	0.0005"
ANGLES ± 0° 30'	
BREAK SHARP CORNERS 0.03 UNLESS OTHERWISE SPECIFIED	

COPYRIGHT VERSON INTERNATIONAL GROUP INC. ALL RIGHTS RESERVED. THIS DOCUMENT CONTAINS UNPUBLISHED CONFIDENTIAL AND PROPRIETARY INFORMATION OF VERSON INTERNATIONAL GROUP INC. NO DISCLOSURE OR USE OF ANY PORTIONS OF THESE MATERIALS MAY BE MADE WITHOUT THE EXPRESS WRITTEN CONSENT OF VERSON INTERNATIONAL GROUP INC.

CHKD.		
DRN.	2/14/95	GJM
DES.		
	DATE	NAME

LITTELL
VERSON INTERNATIONAL GROUP INC.

TITLE LAYOUT - ADJUSTMENT BRIDGE

PART NO. D- 288393

MACHINE #442-16 PO STRAIGHT

ORIG. NO. 01001

SCALE: FULL