SHT 1 OF 1

REF: D-060795

FOR INCHES SEE D-039200

FILING LOCATION D- 302444			
DATE	SYM	WAS	BY

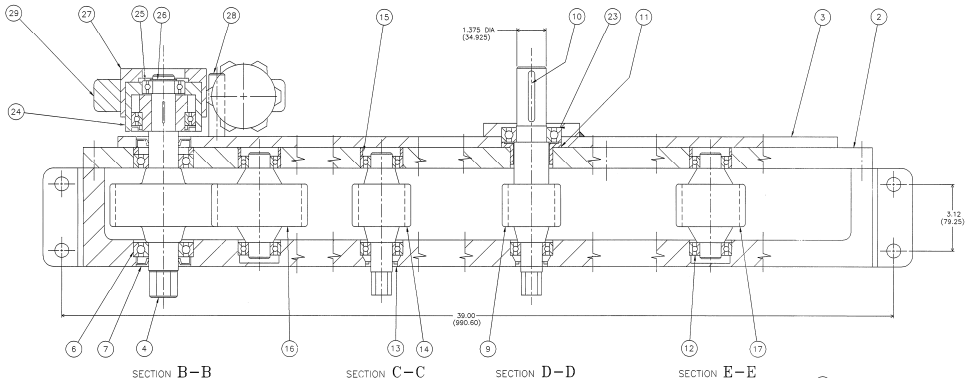

SECTION B-B SECTION C-C SECTION D-D SECTION E-E

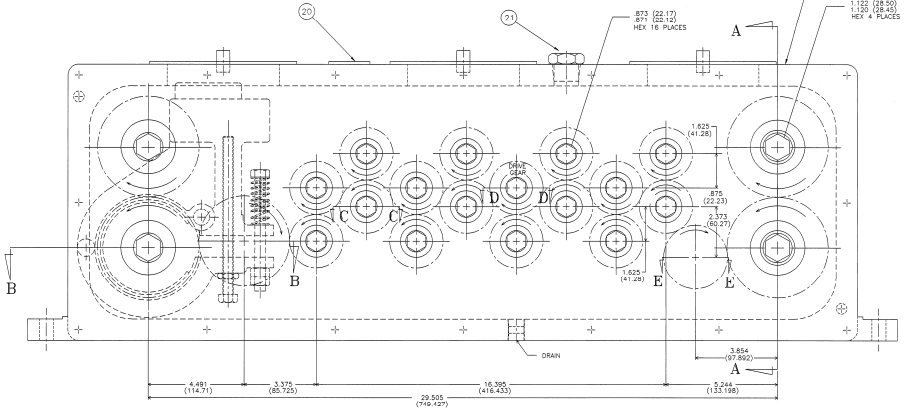

FEED DIRECTION

DIMENSIONS IN (MM) OR IN (MM)

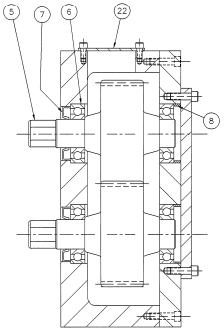

SECTION A-A

ENGINEERING NOTE:

THIS LAYOUT DRAWING SHOWS GEAR BOX PARTS WITH ANTI-BACK UP BRAKE.

IF NOT USING ANTI-BACK UP BRAKE, USE LAYOUT DRAWING D-273654.

DET NO	QTY	PART NO	DESCRIPTION	DRAW'G NO
29	1	092413	BRAKE - "FAWICK" TYPE CS, EL. #4CS150 FORM	CS801
28	1	059827	STUD - BRAKE	A-059827
27	1	059826	SLEEVE - BRAKE	B-059826
26	1	091270	RING - RET "WALDES" #5100-98	
25	1	091269	BRG - BALL "N.D." #Z499505	
24	1	091175	CAM - CLUTCH "NORSE" #HT20	

PARTS LIST (ANTI-BACKUP)

DET NO	QTY	PART NO	DESCRIPTION	DRAW'G NO
23	1	091472	BRG - BALL "N.D." #Z99507	
22	3	049519	COVER - GEAR BOX	A-049519
21	1	237433	BREATHER "McMASTER-CARR" #9833K13 1 NPT	
20	1	028441	PLATE - OIL IDENTIFICATION	A-028441
19				
18				
17	1	049074	GEAR - IDLER 3.00 P.D. 24 T	B-049074
16	1	049073	GEAR - IDLER 4.25 P.D. 34 T	B-049073
15	17	049072	SPACER - BRG	B-040858
14	15	049071	GEAR - ROLL 2.50 PD 20T	B-049071
13	16	091519	SEAL - OIL "NATIONAL" #472324E TYPE BUD47D	
12	35	091760	BRG - BALL "N.D." #3205	
11	1	049070	SPACER - DRIVE GEAR	A-049070
10	1	057804	KEY - FEATHER	B-055000
9	1	049069	GEAR - DRIVE 2.50 P.D. 20 T	B-049069
8	4	049068	SPACER - BRG	A-040922
7	5	092254	SEAL - OIL "C.R." #13875	
6	8	092086	BRG - BALL "N.D." #3207	
5	3	049067	GEAR - PINCH ROLL 38T	B-049067
4	1	049066	GEAR - PINCH ROLL & BRAKE 38T	C-049066
3	1	287755	PLATE - RET - GEAR BOX	C-287755
2	1	287754	COVER - GEAR BOX	C-287754
1	1	287753	BOX - GEAR	D-287753

UNLESS OTHERWISE SPECIFIED FINISHED SURFACES HAVE:
125 MICRO INCH FINISH

DIMENSIONS	TOLERANCE ±
X AND X.X	0.1"
X.XX	0.01"
X.XXX	0.001"
X.XXXX	0.0001"
ANGLES ± 0° 30'	

BREAK SHARP CORNERS 0.03 UNLESS OTHERWISE SPECIFIED

COPYRIGHT VERSON INTERNATIONAL GROUP INC. ALL RIGHTS RESERVED. THIS DOCUMENT CONTAINS UNPUBLISHED CONFIDENTIAL AND PROPRIETARY INFORMATION OF VERSON INTERNATIONAL GROUP INC. NO DISCLOSURE OR USE OF ANY PORTIONS OF THESE MATERIALS MAY BE MADE WITHOUT THE EXPRESS WRITTEN CONSENT OF VERSON INTERNATIONAL GROUP INC.

CHKD.	6-24-98	MS	LITTELL
DRN.	6-23-98	JDK	VERSON INTERNATIONAL GROUP INC.
DES.			
	DATE	NAME	

TITLE ASSEMBLY - GEAR BOX & ANTI-BACKUP PARTS, METRIC

MACHINE #438-16 PD STRA MACHINE

PART NO. D- 302444

ORIG. NO. 23407-25 SHT 1 OF 1 SCALE: .50=1.00

PLOTTED: 06/24/98 AT 08:21