FILING LOCATION D- 310910			
DATE	SYM	WAS	BY
		FOR REVISIONS SEE SHEET #5	

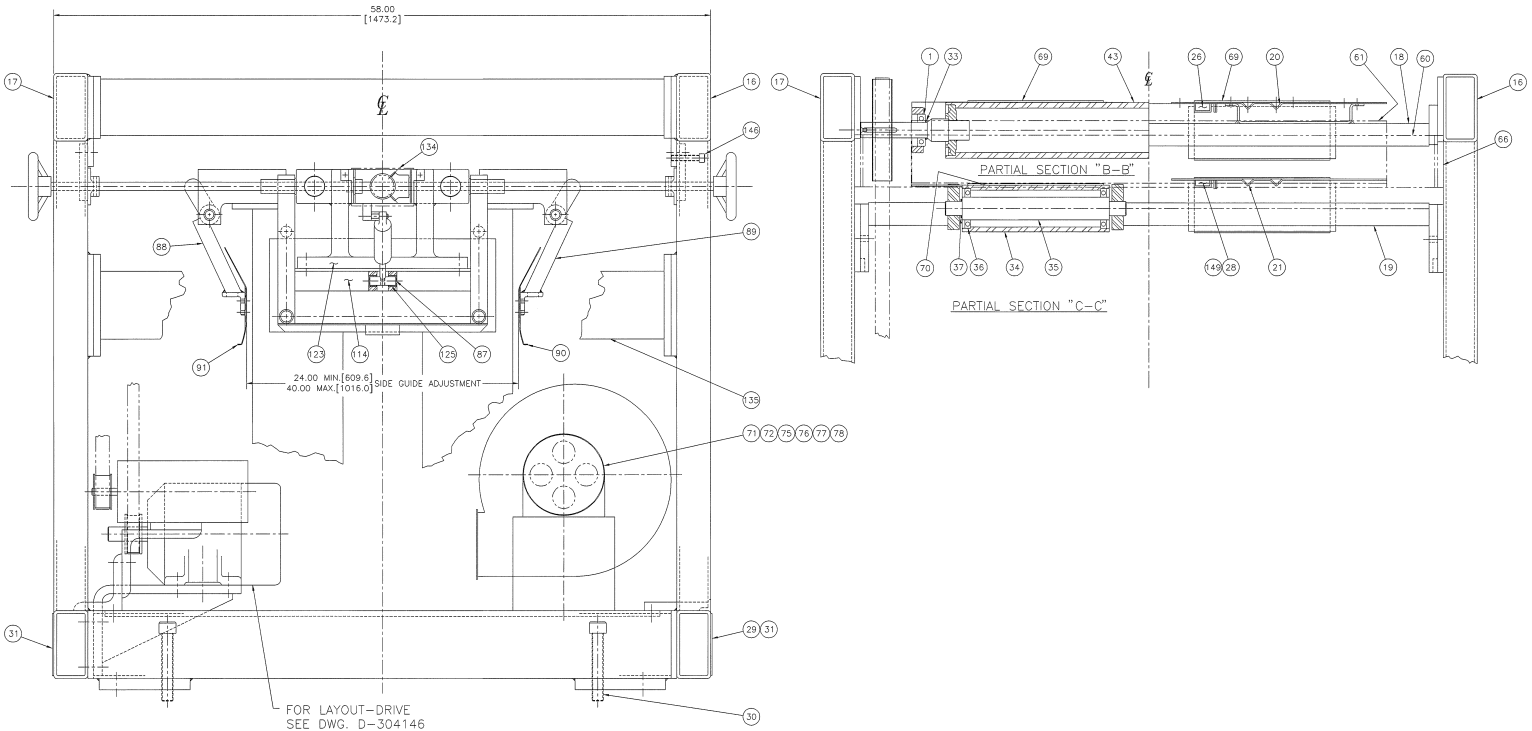

UNLESS OTHERWISE SPECIFIED FINISHED SURFACES HAVE:	
125 MICRO INCH FINISH	
DIMENSIONS	TOLERANCE ±
X AND X.X	0.1"
X.XX	0.01"
X.XXX	0.001"
X.XXXX	0.0005"
ANGLES ± 0° 30'	
BREAK SHARP CORNERS 0.03 UNLESS OTHERWISE SPECIFIED	

COPYRIGHT VERSON INTERNATIONAL GROUP INC. ALL RIGHTS RESERVED. THIS DOCUMENT CONTAINS UNPUBLISHED CONFIDENTIAL AND PROPRIETARY INFORMATION OF VERSON INTERNATIONAL GROUP INC. NO DISCLOSURE OR USE OF ANY PORTIONS OF THESE MATERIALS MAY BE MADE WITHOUT THE EXPRESS WRITTEN CONSENT OF VERSON INTERNATIONAL GROUP INC.

CHKD.	07/11/00	GN
DRN.	07/11/00	JPP
DES.		
	DATE	NAME
TITLE	LAYOUT - STOCKER LM-1E METRIC	
MACHINE	#500 x 40 x 4 STACKER	
ORIG. NO. 94019-99	SHT 4 OF 5	SCALE: 25=1.00

LITTELL
VERSON INTERNATIONAL GROUP INC.
(LEFT SIDE VIEW)

PART NO. D- 310910

PLOTTED: 07/13/00 AT 10:00