FLAG LOCATION D- 310911

DATE	SYM	WAS	BY

ITEM	QTY	PARTS LIST DESCRIPTION (FOR 60 HZ)	MATERIAL PART NO.	DRAWING NO.
1	1	BRACKET-DC MOTOR STATIONARY METRIC	297217	B-297217
2	1	BRACKET-DC MOTOR 2HP ADJUST. METRIC	302757	B-302757
3	1	BAR-BLOWER MTG.	160738	A-160738
4	1	MOTOR- 1 OR 2 HP.	SEE LIST	
5	1	PLATE-TAPPING	297235	B-290505
6	1	BLOWER-"CINCINNATI" #PB12A (CE)	K-304194	
7	1	SPROCKET-"UNIROYAL" #P90-8M-30	K-094270	
8	1	SPROCKET-"UNIROYAL" #P34-8M-30	K-216783	
9	1	BUSHING-"UNIROYAL" TYPE QD. STYLE SH .875 BORE, .093 X .187 KW.	K-259924	
10	1	BRACKET-MOTOR 3HP.	297233	B-297233
11	1	MOTOR- 3 HP.	SEE LIST	
12	1	SPROCKET-"UNIROYAL" #P48-8M-30	K-096780	
13	1	BELT-"UNIROYAL" #HTD 1280-8M-30	K-094111	
14	2	BELT-"UNIROYAL" #HTD 2400-8M-30	K-094113	
15	1	SPROCKET-"UNIROYAL" #P36-8M-30	K-094263	
16	1	SPROCKET-"UNIROYAL" #P64-8M-30	K-224564	
17	1	BRACKET-PULLEYS METRIC	297234	B-297234
18	1	PLATE-PULLEY RETAINER METRIC	297200	A-297200
19	1	SHAFT-PULLEY	160764	A-160764
20	2	BEARING-"ND" #Z499507	K-092506	
21	1	MUFFLER	145654	B-145654
22	2	STRAP-MUFFLER	141986	B-141986
23	2	STRAP-MUFFLER	142518	B-142518
24	1	SPROCKET-"UNIROYAL" #P80-8M-30	K-094264	
25	1	BAR-IDLER TAKE-UP METRIC	297213	A-297213
26	1	PULLEY-IDLER	126758	A-126758
27	1	PIN-IDLER	126760	A-126760

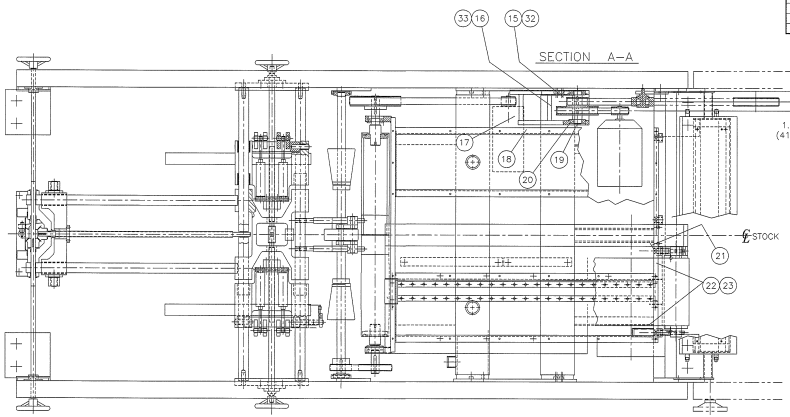

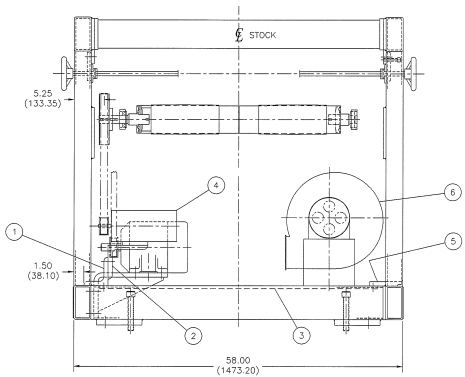

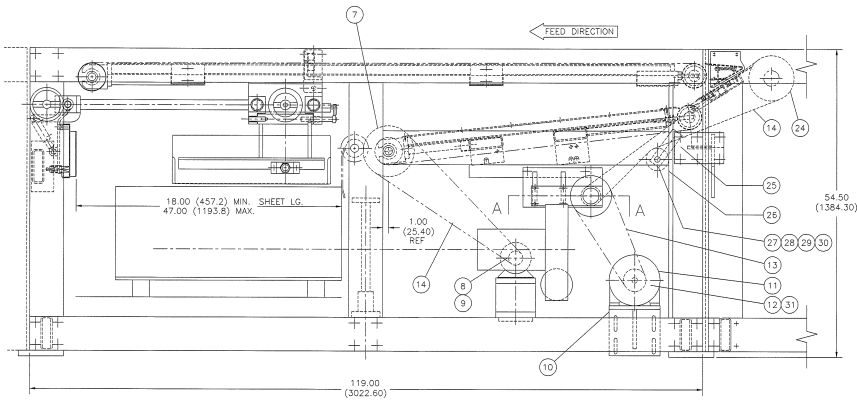

ITEM	QTY	DESCRIPTION (FOR 50 HZ)	MATERIAL PART NO.	DRAWING NO.
28	2	BEARING-"ND" #Z499505	K-091269	
29	1	RING-"SPIROLOX" #RST-98	K-091791	
30	1	CAM-IDLER ROLL	126759	A-126759
31	1	BUSHING-"UNIROYAL" TYPE QD. STYLE SH 1.125 BORE, .125 X .250 KW.	K-097864	
32	1	KEY-SHALLOW .25 X .375 X 1.25 LG	261627	B-065091
33	1	BUSHING-"UNIROYAL" TYPE QD. STYLE SH 1.625 BORE, .062 X .375 KW.	K-254398	

ITEM	QTY	DESCRIPTION (FOR 50 HZ)	MATERIAL PART NO.	DRAWING NO.
12	1	SPROCKET-"UNIROYAL" #P36-8M-30	K-201279	
13	1	BELT-"UNIROYAL" #HTD1120-8M-30	K-234321	
16	1	SPROCKET-"UNIROYAL" #P40-8M-30	K-216816	
8	1	SPROCKET-"UNIROYAL" #P40-8M-30	K-216816	
9	1	BUSHING-"UNIROYAL" TYPE QD. STYLE SH 1.125 BORE, .125 X .250 KW.	K-097864	

DIMENSIONS IN (MM) OR IN (MM)

DRIVE FOR 750 FPM

METRIC STD - D-304146

UNLESS OTHERWISE SPECIFIED FINISHED SURFACES HAVE:	
125 MICRO INCH FINISH	
DIMENSIONS	TOLERANCE ±
X AND X.X	0.1"
X.XX	0.01"
X.XXX	0.001"
X.XXXX	0.0005"
ANGLES ± 0° 30'	
BREAK SHARP CORNERS 0.03 UNLESS OTHERWISE SPECIFIED	

COPYRIGHT VERSON INTERNATIONAL GROUP INC. ALL RIGHTS RESERVED. THIS DOCUMENT CONTAINS UNPUBLISHED CONFIDENTIAL AND PROPRIETARY INFORMATION OF VERSON INTERNATIONAL GROUP INC. NO DISCLOSURE OR USE OF ANY PORTIONS OF THESE MATERIALS MAY BE MADE WITHOUT THE EXPRESS WRITTEN CONSENT OF VERSON INTERNATIONAL GROUP INC.

	DATE	NAME
DWN.	07/10/96	SN
CHKD.	07/10/96	JPP
DES.		

TITLE LAYOUT - LM-2E DRIVE (50 & 60 HZ) METRIC, INCLINE

MACHINE P500-10-1 STACKER

LITTELL
VERSON INTERNATIONAL GROUP INC.

PART NO. D- 310911

ORIG. NO. 94020-39 | SHT 1 OF 1 | SCALE .12=1.0"